Hillmar
Hillmar Industries Ltd.
7371 Vantage Way
Delta, BC V4G 1C9
P:604 946-7115 F:604 946-0329
info@hillmar.com www.hillmar.com

INDUSTRIAL DBCB
DBCB-CSB-3020-16000
SPECIFICATION SHEET
SLS & MKTG
ENGLISH

Sheet Number:	
Job Number:	
Form Number:	829-725-58988PT

Company / Project Reference:	Date.:	Page.:	Document Package No.:	Rev.:
		1 OF 1		

Inventor Drawing

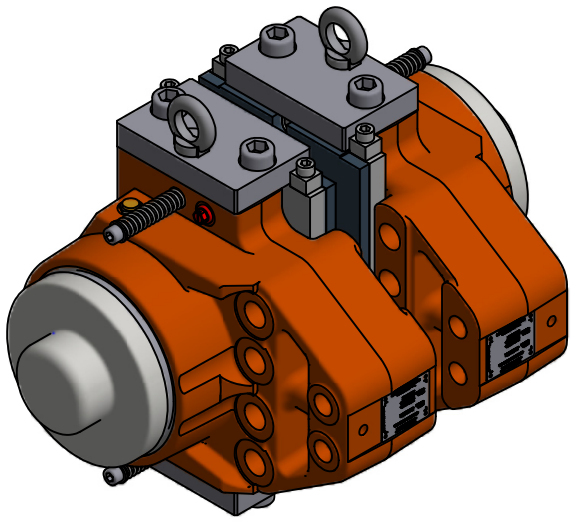

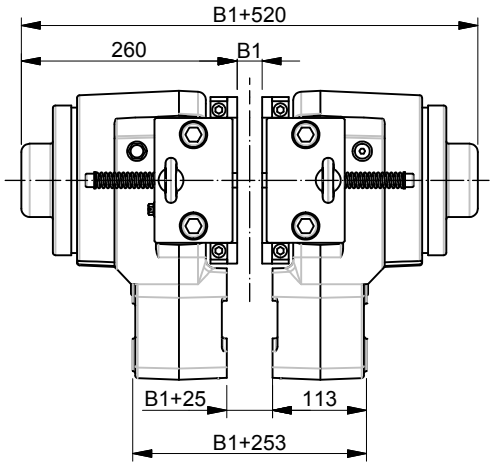

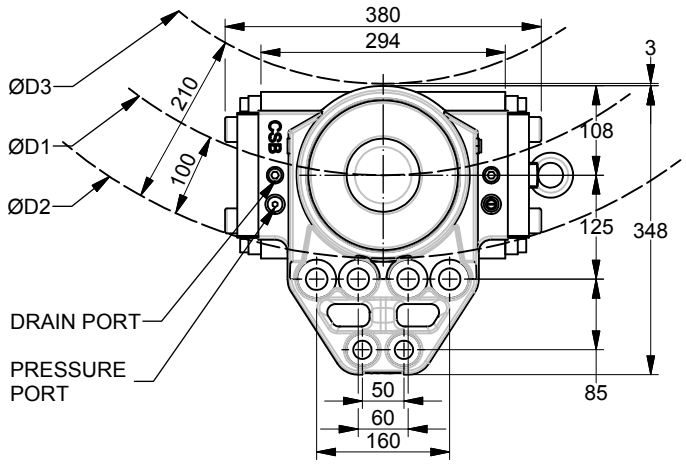

FEATURE	CODE
Industrial disc brake	DBCB
Series	CSB
Foot mount	/
Brake size	3020
Nominal braking force F_B (N)	16000

Example for ordering	DBCB-CSB-3020-16000

TECHNICAL DATA

Clamping force (N) (F_C)		40000
Braking force static @ μ=0.5 (N) (F_B)		20000
Braking force dynamic @ μ=0.4 (N) (F_B)		16000
Loss of force pre 1mm of pad wear (%)		3.3
Maximum wear of each brake pad (mm)	Sintered	10
	Organic	10
Disc thickness B1 (mm)		20 - 50
Theoretical friction diameter		ØD1
Disc diameter		ØD2
Maximum coupling hub diameter		ØD3
Brake pad width (m)		0.2
Nominal air gap		1 mm / side
Braking torque (Nm)		$M_B=F_B$ x (D2-0.2) / 2
Operating pressure (bar)		20
Maximum pressure (bar)		24
Oil volume (CC) to release 1mm/half		12.74
Pressure port connection (2 ports)		1/4" BSPP
Temperature range (°C)		-20 to +70
Standard paint PASTEL ORANGE		RAL #2003
Mounting holes		Ø26 & Ø22
Mounting bolts (CL 10.9)		4 x M24 & 2 x M20
Tightening torque		1050/610
Weight of brake (2 halves) (kg)		150

NOMINAL SPECIFICATION

Actual torque may vary depending on adjustment of brake and coefficient of friction. Brake supplied standard with organic linings.

Bearing and structure loads must be checked due to unbalanced brake loads.

NOTES

All figures are nominal figures only

All dimensions are in millimeters

Document Template #710-101-62058

** ALL TECHNICAL DATA IS SUBJECT TO CHANGE WITHOUT NOTICE **
Hillmar works have a fully registered ISO 9001-2008 quality assurance programme (QCB #01-1525)

C:\TEMP\6ba16fbf-64ec-4ab6-bc32-67de401a849b\80000526232\HILLMAR\HILLMAR PRODUCTION\08 INDUSTRIAL DB\0700-8\07008001 DBCB-CSB\SPC-SHT-DBCB-CSB\58988 DBCB-CSB-3020-16000.idw